Descendant Chart for James COOK

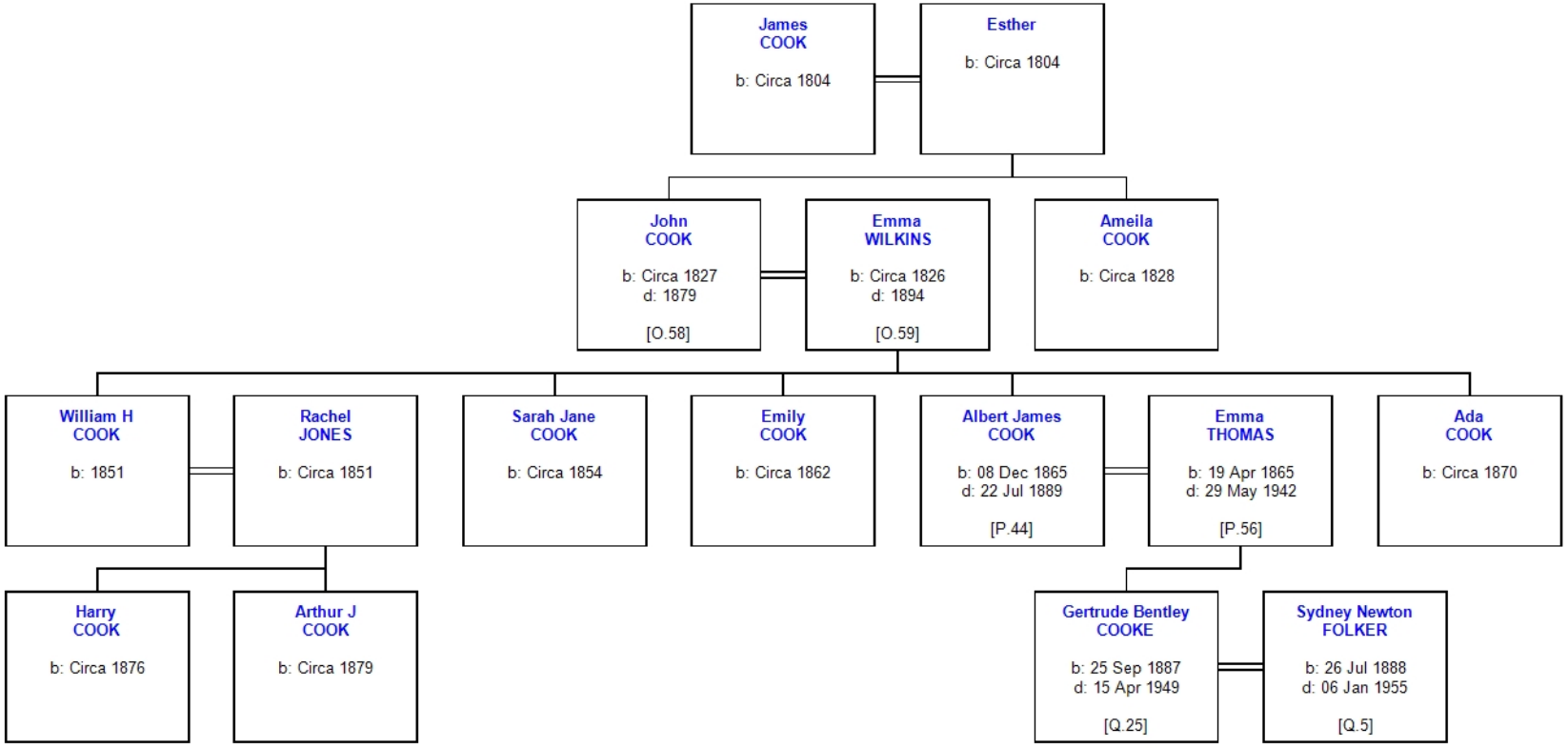

12 February 2017